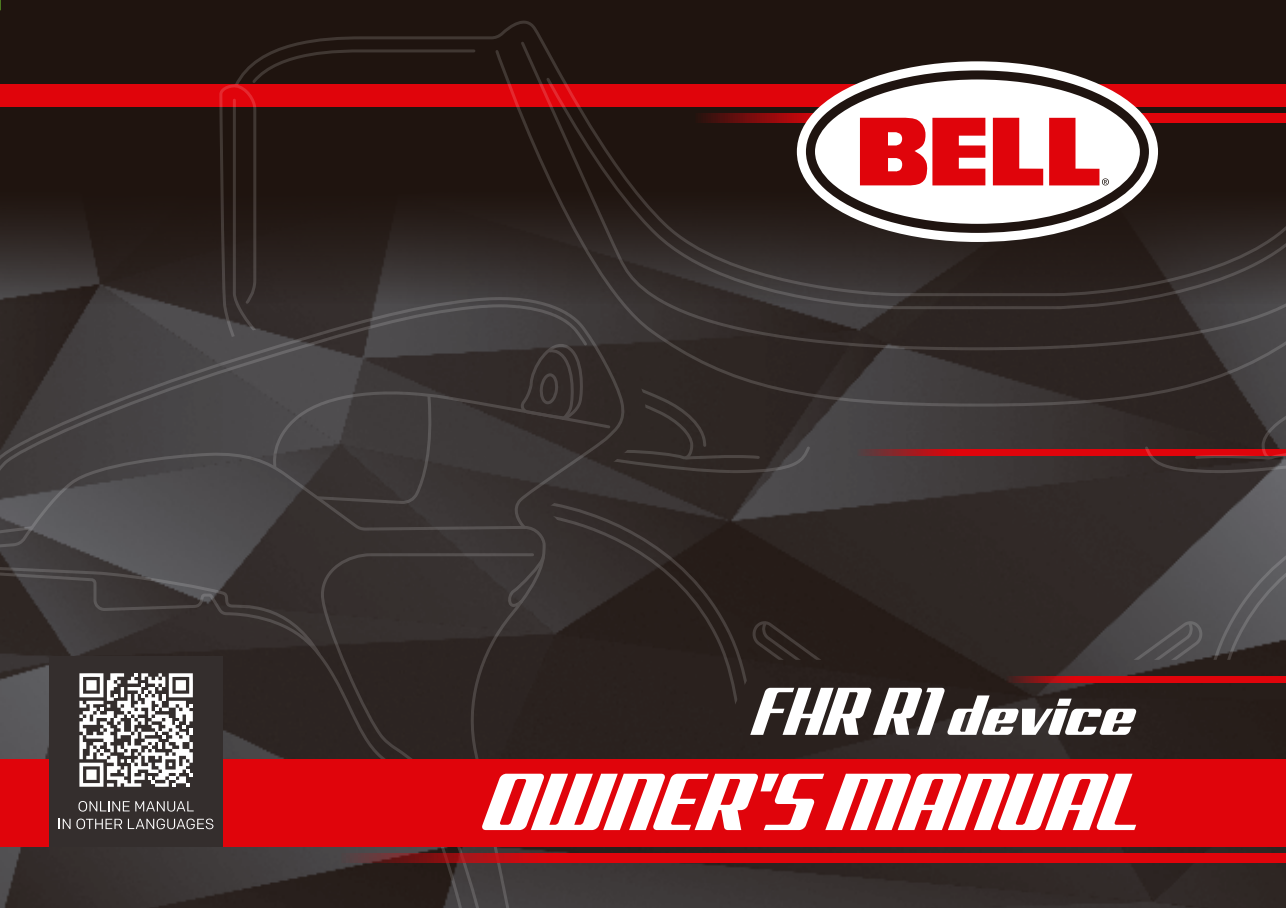

FHR R1 device

OWNER'S MANUAL

ONLINE MANUAL
IN OTHER LANGUAGES



Important: Read this manual carefully before using your FHR R1 device.

⚠ WARNING

All forms of motorized transportation are dangerous.

No product can protect the user against all possible or foreseeable accidents, even those occurring at low speed.

No warranty is expressed or implied regarding the product's ability to prevent users from injury or death.

The user assumes all risks. Take the time to learn what kind of protection you can reasonably expect from your FHR R1 device and how to use it properly.

For the best possible protection, the R1 device must fit correctly, be worn in the proper position, and be securely fastened.

HELMET ANCHORS & TETHER SYSTEMS

There are 3 styles of helmet anchors available for the FHR R1 device in both adjustable length and fixed length. All of the parts are provided with the adjustable version of the tether system.

The adjustable tether can be replaced by a fixed length tether once the initial tether length adjustment in the car has been done.

1. Post anchor tether. Available in fixed length and adjustable length.
Fixed length. Illustration 1.

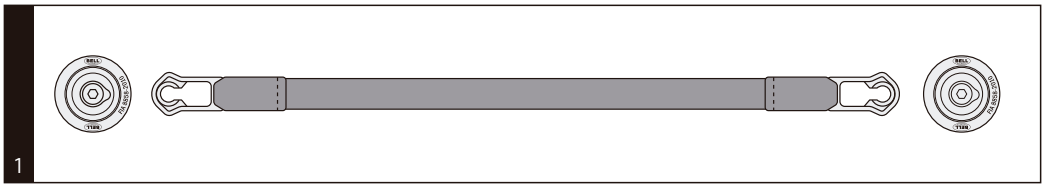

Adjustable length. Illustration 2.



2. Helmet quick release. Available in fixed length and adjustable length.
Fixed length. Illustration 3.



3

Adjustable length. Illustration 4.

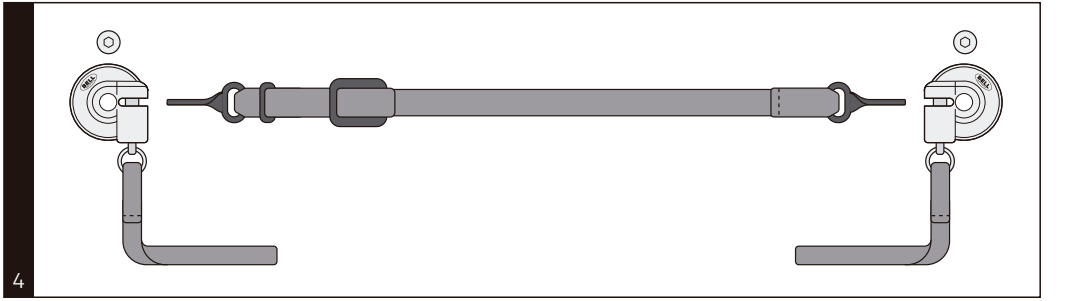

4

3. Snap shackle and D-ring. Available in fixed length and adjustable length.
Fixed length. Illustration 5.

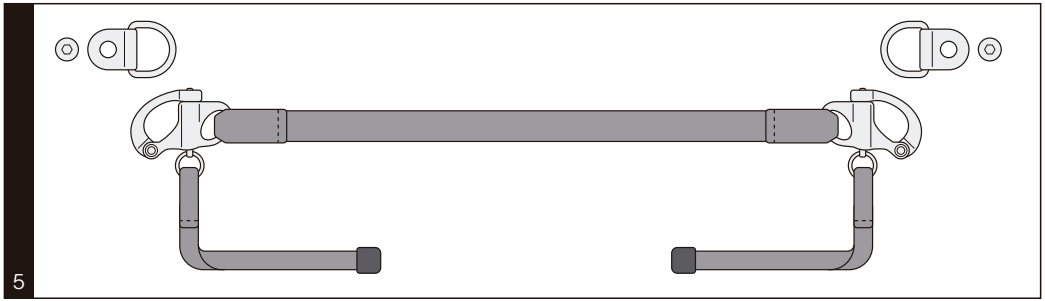

5

Adjustable length. Illustration 6.

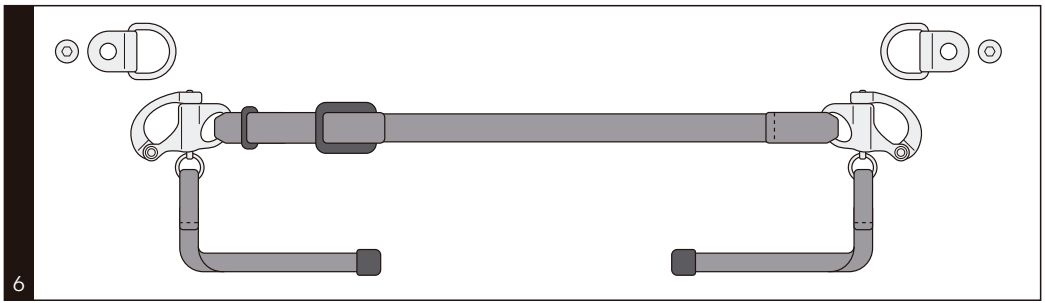

6

Each of the systems requires its own helmet anchor and head restraint tether system.
To install the helmet anchors on your FIA 8858-compatible helmet, use the provided hardware in the kit to attach them to the helmet using the provided M6 anchor points in the helmet.

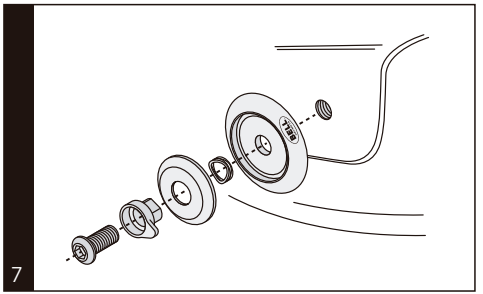

Helmet anchor installation:

1. Insert the anchor assembly screw into the mount with the M6 anchor on the helmet.

Use a medium-strength thread locker if it is not provided on the screw. Medium-strength thread locker example: "Blue" Loctite brand.

Illustration 7.

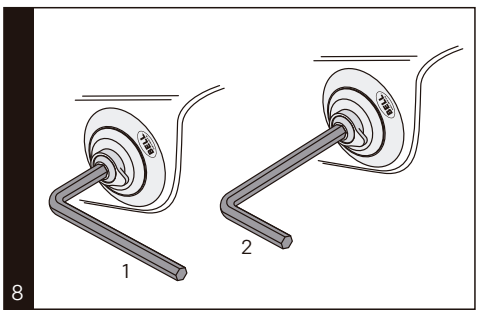

2. Do NOT over-tighten the anchor screw into the helmet. All styles of helmet anchors need to be able to pivot slightly when under crash loads.

Recommended tension is: 25 to 30 in-lbs (use the "short" end of a typical Allen wrench for the initial tensioning. Change ends to the longer side of the Allen tool to finish tightening.

From snug, tighten the screw another ½ turn. This should be close to the recommended torque to tighten the screw into the helmet).

Illustration 8.

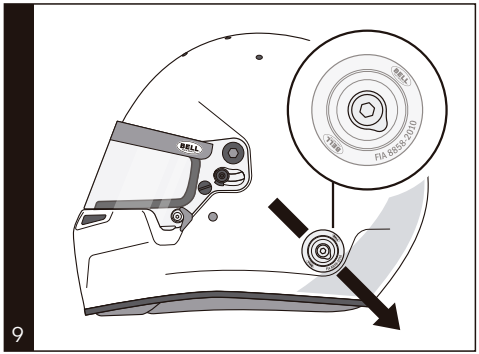

9

3. The triangular protrusion on the post anchor assembly needs to be oriented on the helmet so that the triangular protrusion is pointing at a 45 to 60 degree angle down toward the back of the helmet when the helmet is on the wearer's head.

This orientation needs to align with the tether end fitting on the head restraint when in the car so that the end fitting can be slid onto the helmet post anchor and locked in.

Illustration 9.

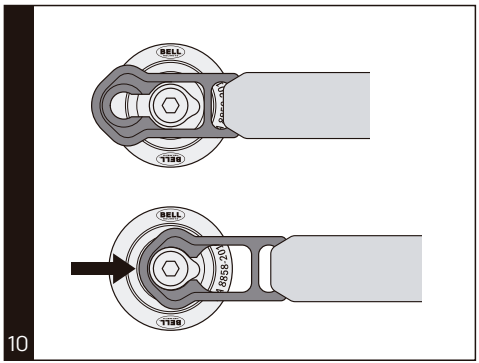

10

4. To attach the post anchor style tether to the helmet anchor, align the "key slot" in the tether end fitting over the center post on the helmet anchor.

Press the end fitting into the spring-loaded plunger and slide it back until the end fitting is seated under the post, then release it. The end fitting should be locked into the helmet anchor at this point.

Illustration 10.

Helmet quick release (HQR)

The helmet quick release system uses a helmet mounted quick release anchor that mates to the HQR tether end fitting.

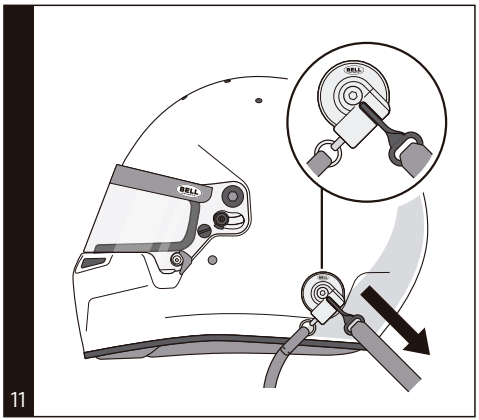

11

HQR helmet anchor installation:

1. Place the HQR helmet anchor over the M6 threaded insert in the FIA 8858 style helmet, oriented with the pin slot angled down 45 to 60 degrees toward the back of the helmet. (The logo should be near horizontal when the helmet is on the wearer's head.)

This orientation should be checked in the car to get the final alignment with the head restraint tether end fitting.

Illustration 11.

2. Insert the anchor assembly screw into the mount with the M6 anchor on the helmet.

Use a medium-strength thread locker if it is not provided on the screw. Medium-strength thread locker example: "Blue" Loctite brand.

3. Do NOT over-tighten the anchor screw into the helmet.
All styles of helmet anchors need to be able to pivot slightly when under crash loads.

Recommended tension is: 25 to 30 in-lbs (use the "short" end of a typical Allen wrench for the initial tensioning. Change ends to the longer side of the Allen tool to finish tightening. From snug, tighten the screw another ½ turn. This should be close to the recommended torque to tighten the screw into the helmet).

4. To attach the head restraint to the helmet:

Illustration 12.

1) Pull the yellow tether down to open the slot to accept the tether end fitting.
2) Align the tether end fitting with the slot on the helmet anchor so that the pin can fit into the hole on the end of the tether end fitting.
3) Release the tether so that the pin can seat into the helmet anchor. To remove, reverse the process.

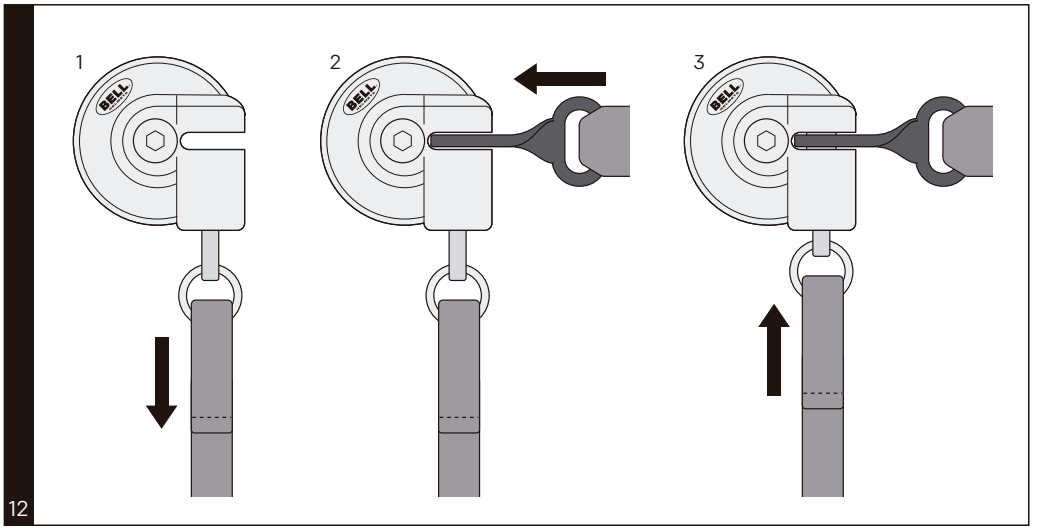

12

Snap shackle and D-ring

The snap shackle and D-ring helmet attachment system consists of a Clip and Dee assembly on the helmet with a snap shackle at the end of the head restraint tether.

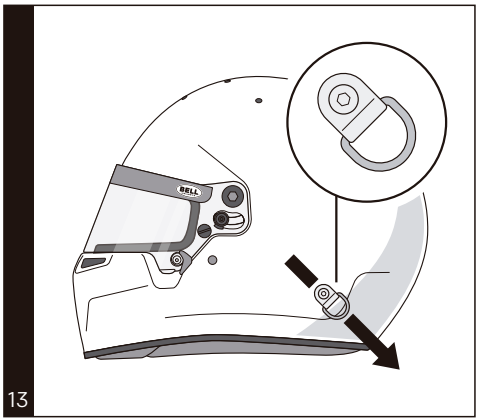

13

Clip and Dee installation:

1. To attach the Clip and Dee to the helmet, align the hole on the clip with the anchor hole and insert the screw provided.

2. Insert the anchor assembly bolt into the mount with the M6 anchor on the helmet.

Use a medium-strength thread locker if it is not provided on the screw. Medium-strength thread locker example: "Blue" Loctite brand.

3. The D-ring should be pointing D-side down toward the rear of the helmet at approximately 45 to 60 degrees down.

This orientation should be checked in the car to get the final alignment with the head restraint tether end fitting.

Illustration 13.

4. Do NOT over-tighten the anchor screw into the helmet.
All styles of helmet anchors need to be able to pivot slightly when under crash loads.

Recommended tension is: 25 to 30 in-lbs (use the "short" end of a typical Allen wrench for the initial tensioning. Change ends to the longer side of the Allen tool to finish tightening. From snug, tighten the screw another ½ turn. This should be close to the recommended torque to tighten the screw into the helmet).

5. To attach the head restraint tether to the helmet:

Illustration 14.

1. Open the bail on the snap shackle by pulling the yellow tether to open the bail.
2. Insert the end of the bail from the outside into the D-ring, going inward and downward.
3. Close the bail onto the spring-loaded pin to lock it in.

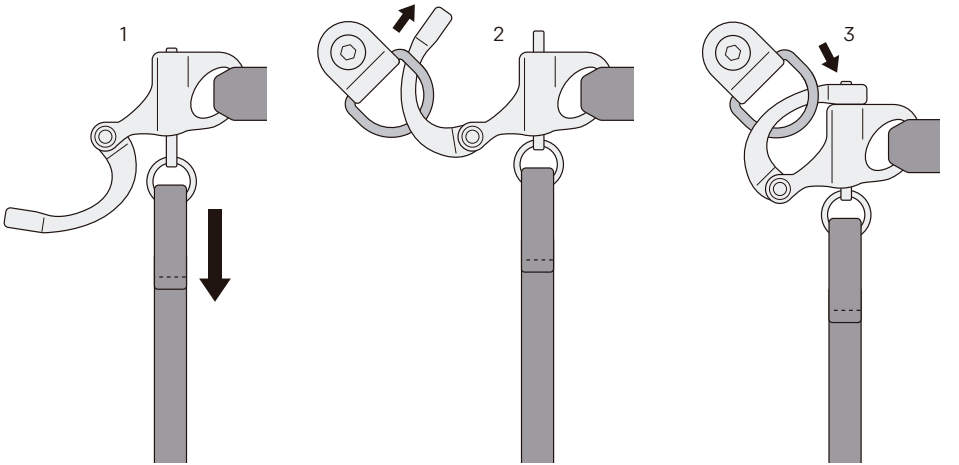

14

HEAD RESTRAINT HARNESS ADJUSTMENT

The R1 series of head restraints comes with an adjustable harness.

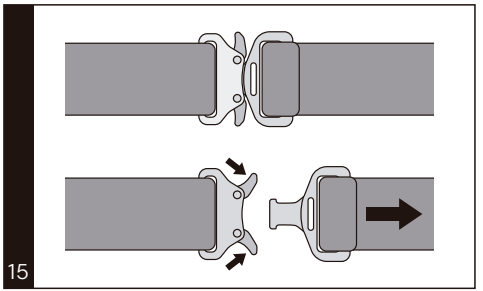

15

To adjust the size of the harness, unbuckle the chest strap by pressing the top and bottom release levers toward the left to release the tongue from the buckle.

Illustration 15.

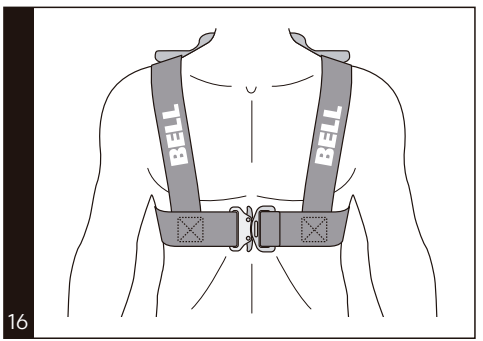

16

Put the harness assembly on like you would a backpack. Insert one arm at a time and reach around behind you to get the other arm into the arm hole.

Check the fit of the harness by trying to buckle the chest strap.

Illustration 16.

If the chest strap needs adjustment:
Unlace the chest buckle until only one layer of strap goes through the buckle.

To tighten: pull the free end.
To lengthen: push the free end through the lock bar and buckle.

- Always make the final adjustment while wearing your fire suit.

- The chest strap should be snug against the body but not restrictive.

When you have completed the harness adjustment, lace the chest strap back through the buckle and lock bar one more time, and lace the free end through the elastic loop on the inside of the chest strap.

Illustration 17.

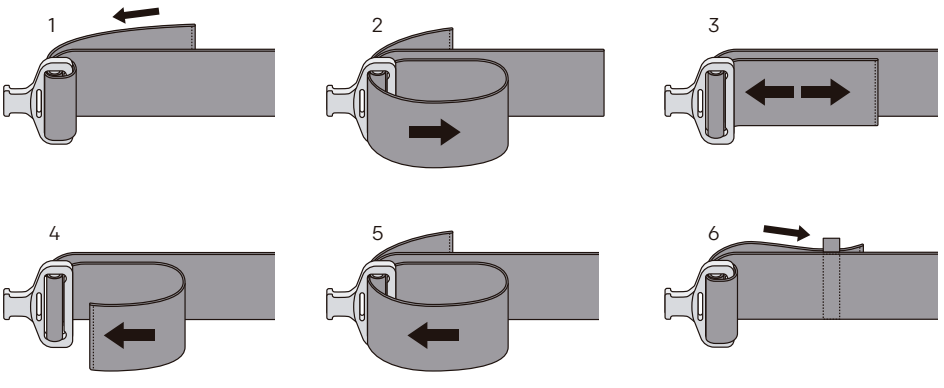

17

TETHER LENGTH ADJUSTMENT

To adjust the length of the tether on an adjustable tether (all tether styles adjust the same, post anchor tether assembly shown). Illustration 18.

1. Pull the extra length of webbing through the 3-bar buckle adjuster on the tether assembly.

2. Pull additional webbing through the 3-bar buckle to make the tether length shorter.

3. Feed the inside loop through the 3-bar buckle and pull it through to the backside loop. This will shorten the tether. Reverse the process to increase the length of the tether.

4. Pull the additional length of the free end of the tether webbing through the 3-bar buckle to lock the assembly down.

5. If the free end of the tether is longer than the end fitting length, fold the end of the tether under and secure it in the rubber o-ring on the assembly.

6. Check the length adjustment in the car to determine the final length.

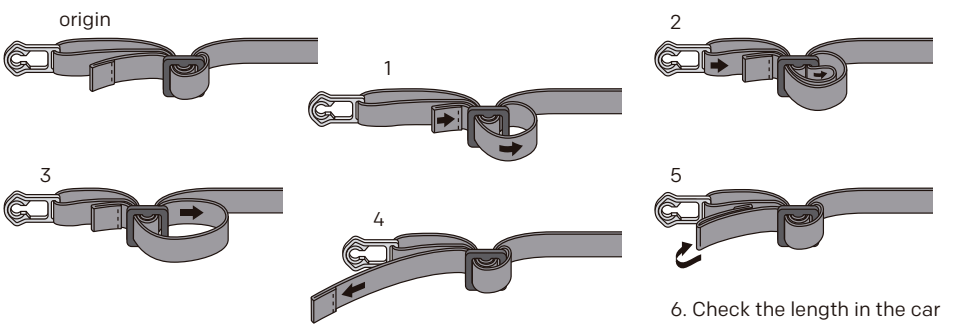

18

IN-CAR TETHER LENGTH CHECK

Always make your final tether length assessment in the car, with the belts on and tight.

1. Fit the device on the occupant and get into the car. The helmet and head restraint must be on and attached.

2. Secure the shoulder belts over the shoulder pads / belt bearing surfaces on the head restraint and secure the seat belt system onto the occupant.

3. The seat belt system should be tightened, lap belts first, then shoulder belts, until at a representative tightness for the driver.

4. To check the head movement forward, move the head forward, with the chin up, straight forward, until the slack is taken out of the tethers. Do not apply enough pressure to move the restraint forward under the belts to check this measurement.

The forward head movement should be between 0" to 2.25" (0 mm to 57.15 mm), depending on your specific type of driving. Use the least amount of movement comfortable in the car within this range.

For adjustable tethers, adjust the length of the tether according to the "TETHER LENGTH ADJUSTMENT" section of this manual to achieve the desired length and forward head movement.

For fixed-length tethers (optional), replace the tether assembly with a longer or shorter length to achieve the desired head movement. If desired, use an adjustable tether to determine the correct length and then replace it with a fixed-length tether of the same dimension.

- The fixed-length tethers are measured from the center of the end fitting holes with the tether flat on a table.

- Fixed-length tethers are available for all tether styles through your Bell dealer.

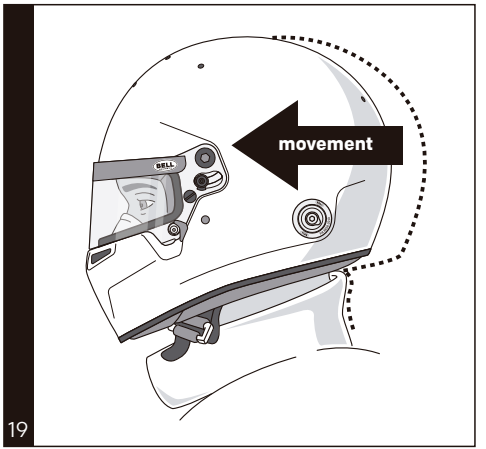

5. With your desired frontal movement determined, rotate your head side to side to check your viewing angle.

Adjust the tether length appropriately to get the frontal movement and head rotation for your style of racing within the adjustment range.

6. Exit the car with the head restraint and helmet on. This is good practice for all drivers. Repeat if necessary to learn how to exit your race car with your equipment on.

CARE AND MAINTENANCE

Always take care of your device by keeping it clean and the belt bearing surfaces in good condition. Replace the shoulder rubber as wear increases. Use only mild detergent and water to remove dirt from the harness and device.

Replace or recertify your SFI 38.1 device after a major wreck.

Never cover the shoulder belt bearing surfaces with anything, including paint or stickers.

Watch for fraying webbing on the tether and harness as the device wears in use. Replace or recertify as needed.

PARTS LIST

Item	Illustration
Tether	
Tether (Adjustable) O-Ring (Left) 3-Bar Buckle (Right)	
Helmet Post Anchor	
Post Anchor Tether-End Fitting (Non-Adjustable)	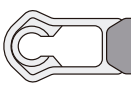
Helmet Quick Release Anchor (HQR Anchor)	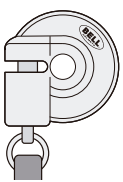 Right 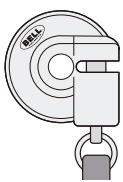 Left

Item	Illustration
Pin (Above) Yellow Tether (Below)	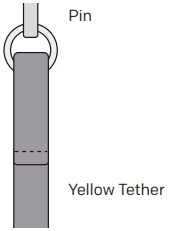
Quick Release Tether-End Fitting (Non-Adjustable)	
D-Ring Clip	
Fixed Eye Snap Shackle	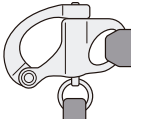

Item	Illustration
Harness	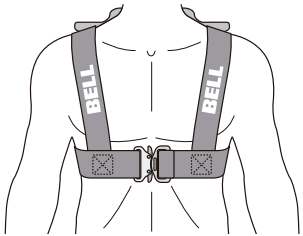
Chest Buckle	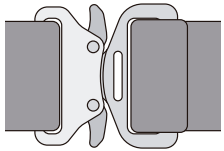
Elastic Loop	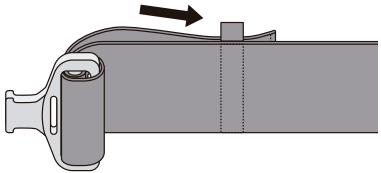

A BRAND OF

RACINGFORCEGROUP

Racing Force International WII.
PO Box 90344, Bldg. 310, Road 6204, Sakhir – 1062, Kingdom of Bahrain
T: +973 17 839 999

www.bellracing.com

OWNER'S MANUAL - FHR R1 - ENGLISH
Version 2026.07.06

BELL IS A REGISTERED TRADEMARK OWNED BY BELL SPORTS, INC., AND LICENSED TO RACING FORCE GROUP.